Table 2.9.18.-8. – *Calculations for Apparatus D when used at a flow rate of 28.3 L/min*

Cut-off diameter (µm)	Mass of active substance deposited per discharge	Cumulative mass of active substance deposited per discharge	Cumulative fraction of active substance (per cent)
$d_7 = 0.4$	mass from stage 8, m_8	$c_7 = m_8$	$f_7 = (c_7/c) \times 100$
$d_6 = 0.7$	mass from stage 7, m_7	$c_6 = c_7 + m_7$	$f_6 = (c_6/c) \times 100$
$d_5 = 1.1$	mass from stage 6, m_6	$c_5 = c_6 + m_6$	$f_5 = (c_5/c) \times 100$
$d_4 = 2.1$	mass from stage 5, m_5	$c_4 = c_5 + m_5$	$f_4 = (c_4/c) \times 100$
$d_3 = 3.3$	mass from stage 4, m_4	$c_3 = c_4 + m_4$	$f_3 = (c_3/c) \times 100$
$d_2 = 4.7$	mass from stage 3, m_3	$c_2 = c_3 + m_3$	$f_2 = (c_2/c) \times 100$
$d_1 = 5.8$	mass from stage 2, m_2	$c_1 = c_2 + m_2$	$f_1 = (c_1/c) \times 100$
$d_0 = 9.0$	mass from stage 1, m_1	$c_0 = c_1 + m_1$	$f_0 = (c_0/c) \times 100$
	mass from stage 0, m_0	$c = c_0 + m_0$	100

Table 2.9.18.-9. – *Calculations for Apparatus E. Use $q = (60/Q)^x$, where Q is the test flow rate in litres per minute, and x is listed in the table*

Cut-off diameter (µm)	x	Mass of active substance deposited per discharge	Cumulative mass of active substance deposited per discharge	Cumulative fraction of active substance (per cent)
$d_7 = 0.34 \times q$	0.67	mass from MOC or terminal filter, m_8	$c_7 = m_8$	$F_7 = (c_7/c) \times 100$
$d_6 = 0.55 \times q$	0.60	mass from stage 7, m_7	$c_6 = c_7 + m_7$	$F_6 = (c_6/c) \times 100$
$d_5 = 0.94 \times q$	0.53	mass from stage 6, m_6	$c_5 = c_6 + m_6$	$F_5 = (c_5/c) \times 100$
$d_4 = 1.66 \times q$	0.47	mass from stage 5, m_5	$c_4 = c_5 + m_5$	$F_4 = (c_4/c) \times 100$
$d_3 = 2.82 \times q$	0.50	mass from stage 4, m_4	$c_3 = c_4 + m_4$	$F_3 = (c_3/c) \times 100$
$d_2 = 4.46 \times q$	0.52	mass from stage 3, m_3	$c_2 = c_3 + m_3$	$F_2 = (c_2/c) \times 100$
$d_1 = 8.06 \times q$	0.54	mass from stage 2, m_2	$c_1 = c_2 + m_2$	$F_1 = (c_1/c) \times 100$
		mass from stage 1, m_1	$c = c_1 + m_1$	100

If necessary, and where appropriate (e.g., where there is a log-normal distribution), plot the cumulative fraction of active substance versus cut-off diameter (see Tables 2.9.18.-7/9) on log probability paper, and use this plot to determine values for the Mass Median Aerodynamic Diameter (MMAD) and Geometric Standard Deviation (GSD) as appropriate. Appropriate computational methods may also be used.

01/2021:20919

2.9.19. PARTICULATE CONTAMINATION: SUB-VISIBLE PARTICLES[9]

Particulate contamination of injections and infusions consists of mobile, undissolved particles, other than gas bubbles, that are unintentionally present. ◊Particulate contamination may originate from various sources and is to be minimised, independent of its type. The level of particulate contamination in parenteral preparations must be controlled.◊

For the determination of particulate contamination, 2 procedures, Method 1 (light obscuration particle count test) and Method 2 (microscopic particle count test), are specified hereinafter. When examining injections and infusions for sub-visible particles, Method 1 is preferably applied. However, it may be necessary to test some preparations by the light obscuration particle count test followed by the microscopic particle count test to reach a conclusion on conformance to the requirements.

Not all parenteral preparations can be examined for sub-visible particles by one or both of these methods. When Method 1 is not applicable, e.g. in case of preparations having reduced clarity or increased viscosity, the test is carried out according to Method 2. Emulsions, colloids, and liposomal preparations are examples. Similarly, products that produce air or gas bubbles when drawn into the sensor may also require ◊specific precautions during sample preparation and/or◊ microscopic particle count testing. If the viscosity of the preparation to be tested is sufficiently high so as to preclude its examination by either test method, a quantitative dilution with an appropriate ◊particle-free◊ diluent may be made to decrease viscosity, as necessary, to allow the analysis to be performed.

The results obtained in examining a discrete unit or group of units for particulate contamination cannot be extrapolated with certainty to other units that remain untested. Thus, statistically sound sampling plans must be developed if valid inferences are to be drawn from observed data to characterise the level of particulate contamination in a large group of units.

METHOD 1. LIGHT OBSCURATION PARTICLE COUNT TEST

Use a suitable apparatus based on the principle of light blockage which allows an automatic determination of the size of particles and the number of particles according to size.

The apparatus is calibrated using suitable certified reference materials consisting of dispersions of spherical particles of known sizes between 10 µm and 25 µm. These standard particles are dispersed in *particle-free water R*. Care must be taken to avoid aggregation of particles during dispersion.

General precautions

The test is carried out under conditions limiting particulate contamination, preferably in a laminar-flow cabinet.

(9) This chapter has undergone pharmacopoeial harmonisation. See chapter *5.8. Pharmacopoeial harmonisation*.

Very carefully wash the glassware and filtration equipment used, except for the membrane filters, with a warm detergent solution and rinse with abundant amounts of water to remove all traces of detergent. Immediately before use, rinse the equipment from top to bottom, outside and then inside, with *particle-free water R*.

Take care not to introduce air bubbles into the preparation to be examined, especially when fractions of the preparation are being transferred to the container in which the determination is to be carried out.

In order to check that the environment is suitable for the test, that the glassware is properly cleaned and that the water to be used is particle-free, the following test is carried out: determine the particulate contamination of 5 samples of *particle-free water R*, each of 5 mL, according to the method described below. If the number of particles of 10 µm or greater size exceeds 25 for the combined 25 mL, the precautions taken for the test are not sufficient. The preparatory steps must be repeated until the environment, glassware and water are suitable for the test.

Method

Mix the contents of the sample by slowly inverting the container 20 times successively. If necessary, cautiously remove the sealing closure. Clean the outer surfaces of the container opening using a jet of *particle-free water R* and remove the closure, avoiding any contamination of the contents. Eliminate gas bubbles by appropriate measures such as allowing the sample to stand for 2 min or sonicating.

For large-volume parenterals, single units are tested. For small-volume parenterals less than 25 mL in volume, the contents of 10 or more units are combined in a cleaned container to obtain a volume of not less than 25 mL; where justified and authorised, the test solution may be prepared by mixing the contents of a suitable number of vials and diluting to 25 mL with *particle-free water R* or with an appropriate solvent without contamination of particles when *particle-free water R* is not suitable. Small-volume parenterals having a volume of 25 mL or more may be tested individually.

Powders for parenteral administration are reconstituted with *particle-free water R* or with an appropriate solvent without contamination of particles when *particle-free water R* is not suitable.

The number of test specimens must be adequate to provide a statistically sound assessment. For large-volume parenterals or for small-volume parenterals having a volume of 25 mL or more, fewer than 10 units may be tested, based on an appropriate sampling plan.

Remove 4 portions, each of not less than 5 mL, and count the number of particles equal to or greater than 10 µm and 25 µm. Disregard the result obtained for the first portion, and calculate the mean number of particles for the preparation to be examined.

◊*Alternative method*

This method is intended to improve the applicability of the test to biological preparations. However, it can be used for any type of preparation.

Clean the outer surfaces of the container(s) using a jet of *particle-free water R*, avoiding any contamination of the contents. Samples are tested under in-use conditions, as directed in the instructions for use (e.g. expelled syringe contents).

For parenteral preparations that have a sufficient volume (i.e. a volume large enough to permit testing), testing of individual units is often preferred.

If the volume is not sufficient, take a suitable number of units, mix each one carefully and thoroughly and then combine the contents in a separate container to obtain the volume required for a single test, depending on the instrument capability and the properties of the sample.

Powders for parenteral administration are reconstituted with *particle-free water R* or with an appropriate particle-free solvent when *particle-free water R* is not suitable.

Eliminate gas bubbles by appropriate measures such as allowing the sample to stand, applying a gentle vacuum or sonicating. Sonication of preparations containing proteins is not recommended.

The number of test specimens must be adequate to provide a statistically sound assessment. For large- and small-volume parenterals, an adequate volume of sample must be provided for analysis; however, single units may be tested based on a statistically sound sampling plan.

Remove 4 approximately equal portions, typically 5 mL each, and count the number of particles equal to or greater than 10 µm and 25 µm. Disregard the result obtained for the first portion, and calculate the mean number of particles for the preparation to be examined. Volumes smaller than 5 mL can also be tested, provided that this amount is appropriately justified. In general, for parenteral preparations that do not have a sufficient volume (e.g. less than 25 mL), performing the test using a volume of 1 mL to 5 mL may be acceptable if permitted by the instrument.◊

Evaluation

For preparations supplied in containers with a nominal volume of more than 100 mL, apply the criteria of test 1.A.

For preparations supplied in containers with a nominal volume of less than 100 mL, apply the criteria of test 1.B.

◆For preparations supplied in containers with a nominal volume of 100 mL, apply the criteria of test 1.B.◆

If the average number of particles exceeds the limits, test the preparation by the microscopic particle count test.

Test 1.A – Solutions for infusion or solutions for injection supplied in containers with a nominal content of more than 100 mL

The preparation complies with the test if the average number of particles present in the units tested does not exceed 25 per millilitre equal to or greater than 10 µm and does not exceed 3 per millilitre equal to or greater than 25 µm.

Test 1.B – Solutions for infusion or solutions for injection supplied in containers with a nominal content of less than 100 mL

The preparation complies with the test if the average number of particles present in the units tested does not exceed 6000 per container equal to or greater than 10 µm and does not exceed 600 per container equal to or greater than 25 µm.

METHOD 2. MICROSCOPIC PARTICLE COUNT TEST

Use a suitable binocular microscope, filter assembly for retaining particulate contamination and membrane filter for examination.

The microscope is equipped with an ocular micrometer calibrated with an objective micrometer, a mechanical stage capable of holding and traversing the entire filtration area of the membrane filter, 2 suitable illuminators to provide episcopic illumination in addition to oblique illumination, and is adjusted to 100 ± 10 magnifications.

The ocular micrometer is a circular diameter graticule (see Figure 2.9.19.-1.) and consists of a large circle divided by crosshairs into quadrants, transparent and black reference circles 10 µm and 25 µm in diameter at 100 magnifications, and a linear scale graduated in 10 µm increments. It is calibrated using a stage micrometer that is certified by either a domestic or an international standard institution. A relative error of the linear scale of the graticule within ± 2 per cent is acceptable. The large circle is designated the graticule field of view (GFOV).

2 illuminators are required. One is an episcopic brightfield illuminator internal to the microscope, the other is an external, focusable auxiliary illuminator adjustable to give reflected oblique illumination at an angle of 10-20°.

The filter assembly for retaining particulate contamination consists of a filter holder made of glass or other suitable material, and is equipped with a vacuum source and a suitable membrane filter.

The membrane filter is of suitable size, black or dark grey in colour, non-gridded or gridded, and 1.0 µm or finer in nominal pore size.

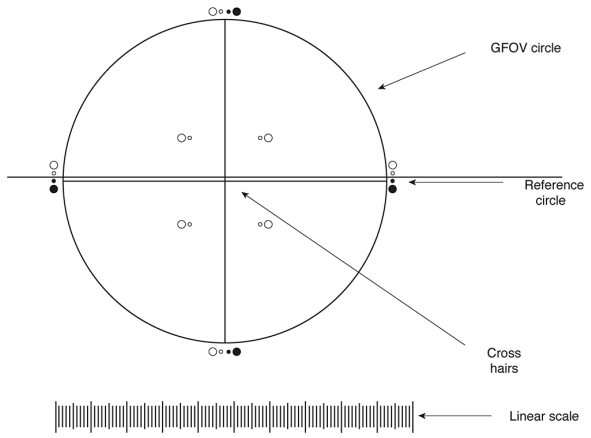

Figure 2.9.19.-1. – *Circular diameter graticule*

General precautions

The test is carried out under conditions limiting particulate contamination, preferably in a laminar-flow cabinet.

Very carefully wash the glassware and filter assembly used, except for the membrane filter, with a warm detergent solution and rinse with abundant amounts of water to remove all traces of detergent. Immediately before use, rinse both sides of the membrane filter and the equipment from top to bottom, outside and then inside, with *particle-free water R*.

In order to check that the environment is suitable for the test, that the glassware and the membrane filter are properly cleaned and that the water to be used is particle-free, the following test is carried out: determine the particulate contamination of a 50 mL volume of *particle-free water R* according to the method described below. If more than 20 particles 10 µm or larger in size or if more than 5 particles 25 µm or larger in size are present within the filtration area, the precautions taken for the test are not sufficient. The preparatory steps must be repeated until the environment, glassware, membrane filter and water are suitable for the test.

Method

Mix the contents of the samples by slowly inverting the container 20 times successively. If necessary, cautiously remove the sealing closure. Clean the outer surfaces of the container opening using a jet of *particle-free water R* and remove the closure, avoiding any contamination of the contents.

For large-volume parenterals, single units are tested. For small-volume parenterals less than 25 mL in volume, the contents of 10 or more units are combined in a cleaned container; where justified and authorised, the test solution may be prepared by mixing the contents of a suitable number of vials and diluting to 25 mL with *particle-free water R* or with an appropriate solvent without contamination of particles when *particle-free water R* is not suitable. Small-volume parenterals having a volume of 25 mL or more may be tested individually.

Powders for parenteral administration are constituted with *particle-free water R* or with an appropriate solvent without contamination of particles when *particle-free water R* is not suitable.

The number of test specimens must be adequate to provide a statistically sound assessment. For large-volume parenterals or for small-volume parenterals having a volume of 25 mL or more, fewer than 10 units may be tested, based on an appropriate sampling plan.

Wet the inside of the filter holder fitted with the membrane filter with several millilitres of *particle-free water R*. Transfer to the filtration funnel the total volume of a solution pool or of a single unit, and apply vacuum. If needed, add stepwise a portion of the solution until the entire volume is filtered. After the last addition of solution, begin rinsing the inner walls of the filter holder by using a jet of *particle-free water R*. Maintain the vacuum until the surface of the membrane filter is free from liquid. Place the filter in a Petri dish and allow the filter to air-dry with the cover slightly ajar. After the filter has been dried, place the Petri dish on the stage of the microscope, scan the entire membrane filter under the reflected light from the illuminating device, and count the number of particles that are equal to or greater than 10 µm and the number of particles that are equal to or greater than 25 µm. Alternatively, partial filter count and determination of the total filter count by calculation is allowed. Calculate the mean number of particles for the preparation to be examined.

The particle sizing process with the use of the circular diameter graticule is carried out by transforming mentally the image of each particle into a circle and then comparing it to the 10 µm and 25 µm graticule reference circles. Thereby the particles are not moved from their initial locations within the graticule field of view and are not superimposed on the reference circles for comparison. The inner diameter of the transparent graticule reference circles is used to size white and transparent particles, while dark particles are sized by using the outer diameter of the black opaque graticule reference circles.

In performing the microscopic particle count test do not attempt to size or enumerate amorphous, semi-liquid, or otherwise morphologically indistinct materials that have the appearance of a stain or discolouration on the membrane filter. These materials show little or no surface relief and present a gelatinous or film-like appearance. In such cases the interpretation of enumeration may be aided by testing a sample of the solution by the light obscuration particle count test.

◊*Alternative method*

This method is intended to improve the applicability of the test to biological preparations. However, it can be used for any type of preparation.

Clean the outer surfaces of the container(s) using a jet of *particle-free water R*, avoiding any contamination of the contents. Samples are tested under in-use conditions, as directed in the instructions for use (e.g. expelled syringe contents).

For parenteral preparations that have a sufficient volume (i.e. a volume large enough to permit testing), testing of individual units is often preferred.

If the volume is not sufficient, take a suitable number of units, mix each one carefully and thoroughly and then combine the contents in a separate container to obtain the volume required for a single test, depending on the instrument capability and the properties of the sample.

Powders for parenteral administration are reconstituted with *particle-free water R* or with an appropriate particle-free solvent when *particle-free water R* is not suitable.

The number of test specimens must be adequate to provide a statistically sound assessment. For large- and small-volume parenterals, an adequate volume of sample must be provided for analysis; however, single units may be tested based on a statistically sound sampling plan.

Continue as described under Method 2 above, starting from "Wet the inside...".◊

Evaluation

For preparations supplied in containers with a nominal volume of more than 100 mL, apply the criteria of test 2.A.

For preparations supplied in containers with a nominal volume of less than 100 mL, apply the criteria of test 2.B.

◆For preparations supplied in containers with a nominal volume of 100 mL, apply the criteria of test 2.B.◆

Test 2.A – Solutions for infusion or solutions for injection supplied in containers with a nominal content of more than 100 mL

The preparation complies with the test if the average number of particles present in the units tested does not exceed 12 per millilitre equal to or greater than 10 µm and does not exceed 2 per millilitre equal to or greater than 25 µm.

Test 2.B – Solutions for infusion or solutions for injection supplied in containers with a nominal content of less than 100 mL

The preparation complies with the test if the average number of particles present in the units tested does not exceed 3000 per container equal to or greater than 10 µm and does not exceed 300 per container equal to or greater than 25 µm.

01/2020:20920

2.9.20. PARTICULATE CONTAMINATION: VISIBLE PARTICLES

Particulate contamination consists of mobile undissolved substances, other than gas bubbles, unintentionally present in liquid preparations.

The test is intended to provide a simple procedure for the visual assessment of the quality of liquid preparations, if applicable after reconstitution, as regards visible particles.

EQUIPMENT

The equipment (see Figure 2.9.20.-1) consists of a viewing station comprising:

- a matt black panel (A) of appropriate size held in a vertical position;
- a non-glare white panel (B) of appropriate size held in a vertical position next to the black panel;
- a non-glare white panel (C) of appropriate size held in a horizontal position next to (A) and (B);
- a lampholder (D) fitted with a suitable, shaded, white-light source and with a suitable light diffuser (e.g. a viewing illuminator containing two 13 W fluorescent tubes, each 525 mm in length, or an appropriate light-emitting diode (LED) light source). The intensity of illumination at the viewing point is maintained between 2000 lux and 3750 lux, although higher values may be required for coloured glass or plastic containers and for coloured or turbid preparations.

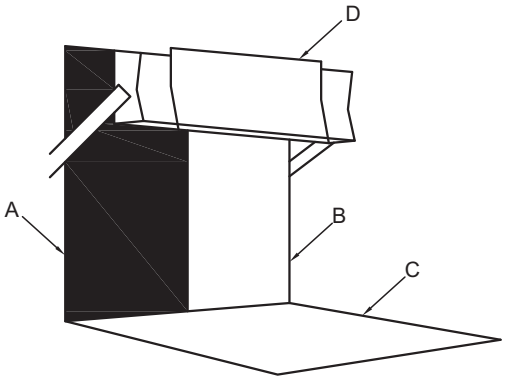

Figure 2.9.20.-1. – *Equipment for visible particles*

METHOD

Adequate visual inspection of the container and contents is necessary, which may require the removal of any adherent labels from the container. Gently swirl or invert the container, ensuring that air bubbles are not introduced, and observe without magnification for about 5 s in front of the white panel (B), although longer observation times may be required for coloured glass or plastic containers and for coloured or turbid preparations. Where inspection in the primary container is not possible, the contents may be transferred for inspection into a sample container that is free from visible particles, taking precautions to prevent contamination during transfer. Repeat the inspection in front of the black panel (A). Record the presence of any visible particles.

01/2008:20922

2.9.22. SOFTENING TIME DETERMINATION OF LIPOPHILIC SUPPOSITORIES

The test is intended to determine, under defined conditions, the time which elapses until a suppository maintained in water softens to the extent that it no longer offers resistance when a defined weight is applied.